Contaminant Tolerant Scroll Vacuum Pump for Lunar Oxygen ISRU Air Lock Vapor Recovery. S.L. Caskey[1], A. Skipworth[2], and J. Wilson[3], [1]Air Squared, Inc. 675 E 124th Ave, Thornton, CO 80241, s.caskey@airsquared.com, [2]Air Squared, Inc., a.skipworth@airsquared.com, and [3]Air Squared, Inc., j.wilson@airsquared.com.

Introduction: NASA is seeking focused efforts to develop contaminant-tolerant vacuum pumps to support in situ resource utilization (ISRU) processes operating on the lunar surface to generate oxygen vapors from the lunar regolith, Figure 1 [1]. Depending on the finalized converstion method, a pressurized volume may be required to be evacuated in order to prevent the loss of products and consumables to the vacuum of space when regolith either enters or exits the volume. A vacuum pump may be exposed to corrosive substances such as HCl, HF, and H_2S. NASA needs a solution capable of evacuating a volume of 50 L with an initial pressure of 5 psia down to a pressure under 5 torr at the pump inlet under 2 minutes while compressing the gases to 1 atm at the pump outlet [2].

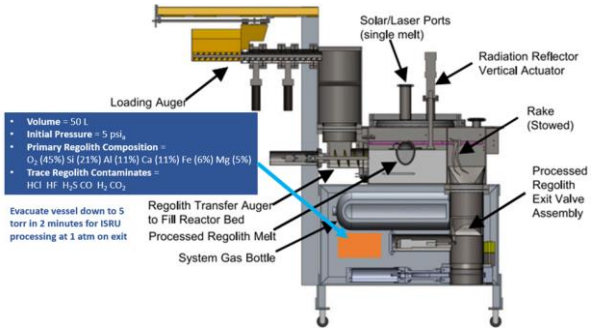

Figure 1: Example Lunar Oxygen In-Situ Resource Utilization (ISRU) from Earth Demonstration Approach to Identify Vacuum Pump Location

Approach: An oil-free scroll compressor provides compact benefits for integration onto a lunar ISRU and can be designed with select materials to be robust as a containment tolerant vacuum pump. Five subscale units were built up (images of three shown in Figure 2) to conduct a detailed experimental, tank pump down study to support a preliminary design study on two Alpha prototype approaches needed to reach a pump down time of 2 minutes. The on-hand subscale units were a V06 and V09 with suction volume of 5 cm^3/rev and 15 cm^3/rev, respectively. The three V06s used had either different scroll materials, alumimum versus stainless steel, or had a flexible bellows installed around the scrolls to isolate the working fluid to minimize the amount of internal hardware exposure to the working fluid. The units were determined to be subscale by creating a basic transient model predicting the change in tank pressure over time across different fixed speeds available. Two V09s operating in parallel were experimentally verified to reach the required 2-minute target by pushing the speed of one V09 beyond the 4,000 RPM nominal speed rating.

The subscale units were evaluated on an test stand with a 50 liter tank to document their pump down time when starting at a nitrogen pressure of 5 psia. Several cycles were collected on each unit across several fixed speeds. The goal is to capture any degradation over the number of pump down cycles exercised. When testing two V09s, the higher flow rates to reach the 2-minute pump down target required test stand modifications to reduce pressure drop between the vacuum pumps and the elevated pressure tank.

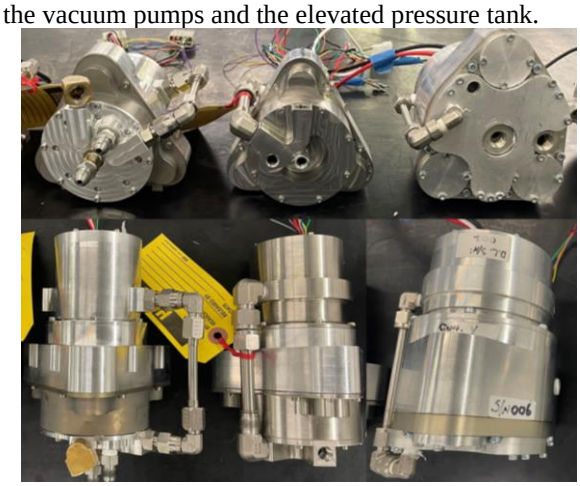

Figure 2: Three of five vacuum pump options (V06 and V09) assembled for experimental investigation on pump down performance and wear

Results:

The test results from two V09s operating in parallel are highlighted here as this subscale configuration was able to the pump down target of 2-minutes. The units had to operate at higher than nominal speeds, 4,600 RPM and 5,000 RPM, to reach a sub-2-minute pump down time on a tank volume of roughly 50 liters. Figure 3 shows the tank pressure over time for the different speeds evaluated. The graph also captures the benefit of test stand modifications to reduce the pump down time. Similar trends captured on the V06 and single V09 are seen for the dual V09s. As pump down time

decreases, the power draw magnitude increases which reflects higher flow rates generated by the vacuum pump to support the reduced pump down duration.

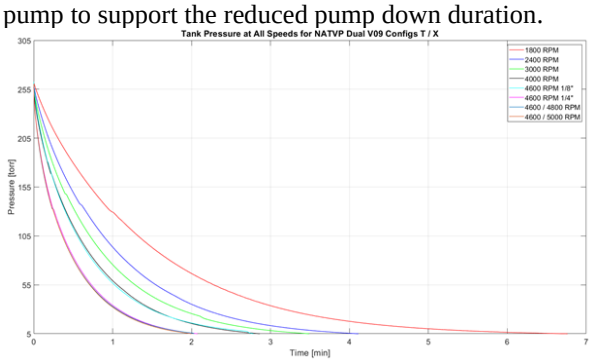

Figure 3: Dual V09 Pump Down Time for Each Speed and Test Stand Upgrades to Address Pressure Drop

The standard PTFE tip seal material did not show any concerns regarding accelerated wear under the pump down conditions evaluated. Despite the positive feedback on the lack of accelerated tip seal wear with standard PTFE, glass-filled or carbon-filled PTFE materials will be explored during the full-scale system development and experimental characterization.

Next Steps: After completing the subscale testing with on-hand scroll hardware, a full scale design is to be experimentally evaluated with exposure to acid vapors and lunar regolith simulant material. Figure 4 introduces a preliminary plumbing and instrumentation diagram for the vacuum depressurization test stand that identifies the major components needed to conduct a wear and accelerated life experimental study. A HEPA filter is currently not shown in the diagram but will be added to provide experimental feedback on its ability to prevent significant amounts of lunar regolith simulant dust reaching the vacuum pump inlet ports. A discharge filter is located upstream of the backpressure controller to collect any debris leaving the Alpha prototypes. The accumulation of any debris will be sampled and sent out for mass spectrometry analysis to document the constituents. By documenting the debris, it will determine its source and provide a reference to evaluate if the debris will contaminate the ISRU vapor products and complicate the pure oxygen production process. Due to the amount of challenging materials expected in the working fluid, the stand will not incorporate a flow meter which is mainly needed to document performance. With the focus being a 2-minute pump down time, the testing would still provide coverage on this parameter. Controlled, baseline tests will be conducted using nitrogen on a different test stand to track any performance changes between each wear study conducted. Currently, a mixture of carbon monoxide, hydrogen, and methane (CH_4) vapors are being considered as the leading candidate for the introduction of acid vapors (HCL, HF, and H_2S) and lunar regolith simulant but is subject to be updated per NASA's and ISRU developers input. A materials expert consulted during the subscale evaluation is retained as a consultant to support the design of the stand. The stand should be easily controlled and repeatable to ensure each pump down introduces the same quantity of acid vapors and lunar regolith simulant dust. The next phase of the project has started at submission of this abstract and is tasked to develop two prototype iterations during the two-year technical effort, wrapping up by the end of 2024.

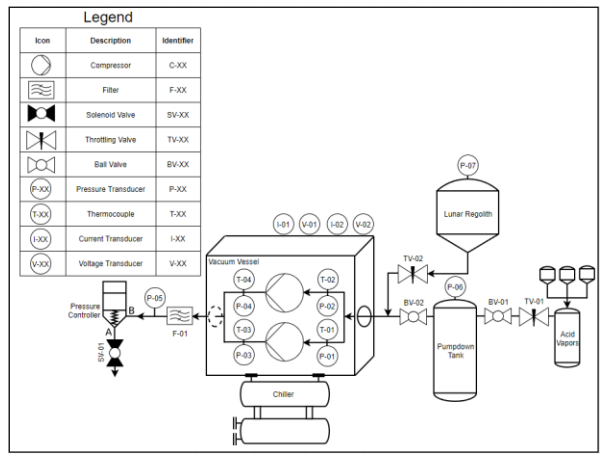

Figure 4: Vacuum Depressurization Acid Vapor and Lunar Regolith Simulant Wear Test Stand Plumbing and Instrumentation Diagram

References:

[1] Gustafson, Robert J., Brant C. White, and Michael J. Fidler. "Oxygen production via carbothermal reduction of lunar regolith." SAE International Journal of Aerospace 4.1 (2011): 311. doi.org/10.4271/2009-01-2442

[2] NASA SBIR/STTR 2021 Program Solictation Topic Z12.01 Extraction of Oxygen and Water from Lunar Regolith Description