Contaminant Tolerant Scroll Vacuum Pump for Lunar Oxygen ISRU Air Lock Vapor Recovery

BY: S.L. CASKEY[1], **A. SKIPWORTH[2*]**, AND J. WILSON[3], [1]AIR SQUARED, INC. 675 E 124TH AVE, THORNTON, CO 80241, S.CASKEY@AIRSQUARED.COM, [2]AIR SQUARED, INC., A.SKIPWORTH@AIRSQUARED.COM, AND [3]AIR SQUARED, INC., J.WILSON@AIRSQUARED.COM.

*PRESENTING AUTHOR

Introduction

NOVEL OXYGEN EXTRACTION CONCEPTS

- NASA is seeking focused effort to develop contaminant-tolerant vacuum pumps
- In Situ Resource Utilization (ISRU) processes may require a pressurized volume to be evacuated in order to prevent the loss of products and consumables to the vacuum of space when regolith either enters or exits the volume
  - Pump may be exposed to corrosive substances such as HCl, HF, and H_2S
    - 1 kg melted and process regolith liberates 0.36 g HCL, 0.68 g of HF, and 0.10 g of H_2S [1]
    - Lunar regolith contains ~ 45 wt.% oxygen chemical bound
  - Proposed concepts should be capable of evacuating a volume of 50 L with an initial pressure of 5 psia down to a pressure of <5 torr at the pump inlet in <2 min while compressing the gases to 1 atm at the pump outlet

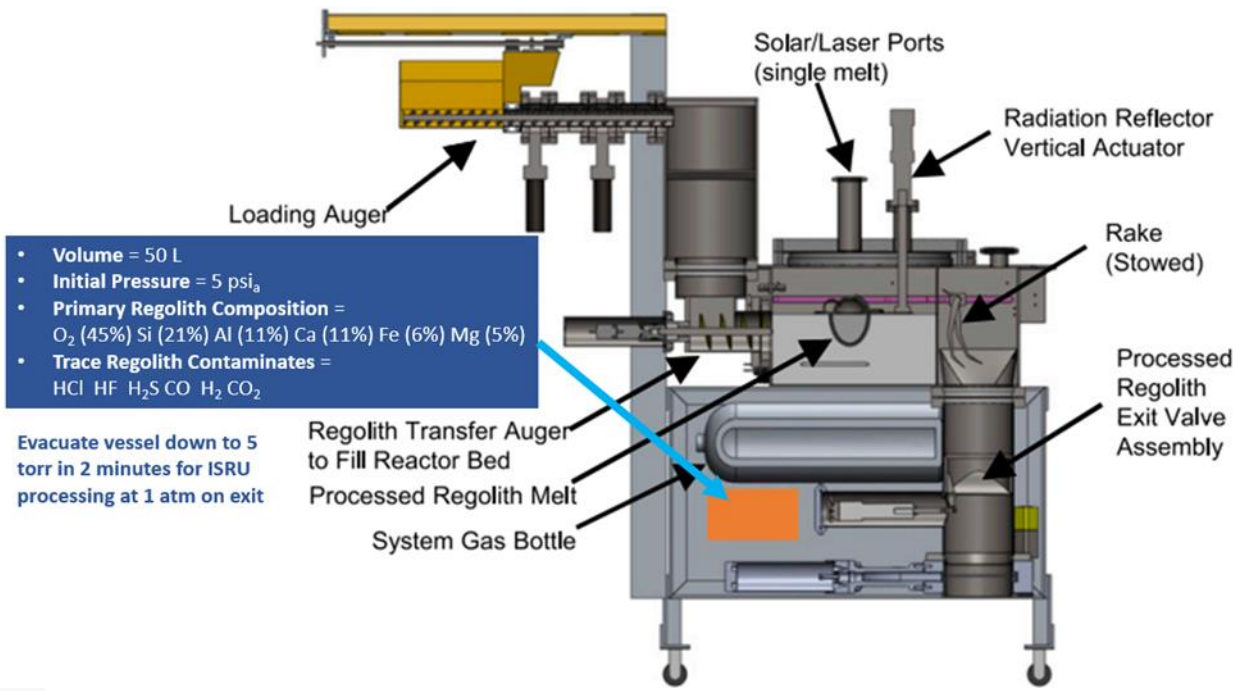

[1] https://sbir.nasa.gov/solicit/66886/detail?data=ch9Z12.01 - Novel Oxygen Extraction Concepts

Introduction

PUMP DOWN TIME ANALYSIS – ENGINEERING EQUATION SOLVER

- Total energy for pump down time required was evaluated for 2 different vacuum pump models operating at 4000 RPM
  - Analysis used to evaluate suction volume provided by subscale vacuum pump and size test stand components
- Single V06 with suction volume of 5cc/rev has pump down time of about 14 minutes
- Predicted that two V09s can hit 2.5-min pump down time
  - Total suction volume of 30cc/rev
  - Can run units faster than target speed of 4000 RPM to reach target pump down time
- Expected flow range was explored to select the required discharge flow meter and back pressure controller

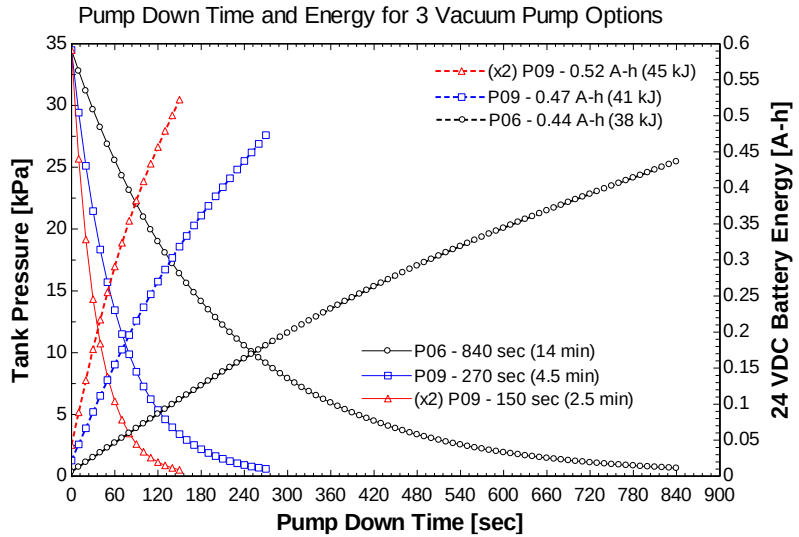

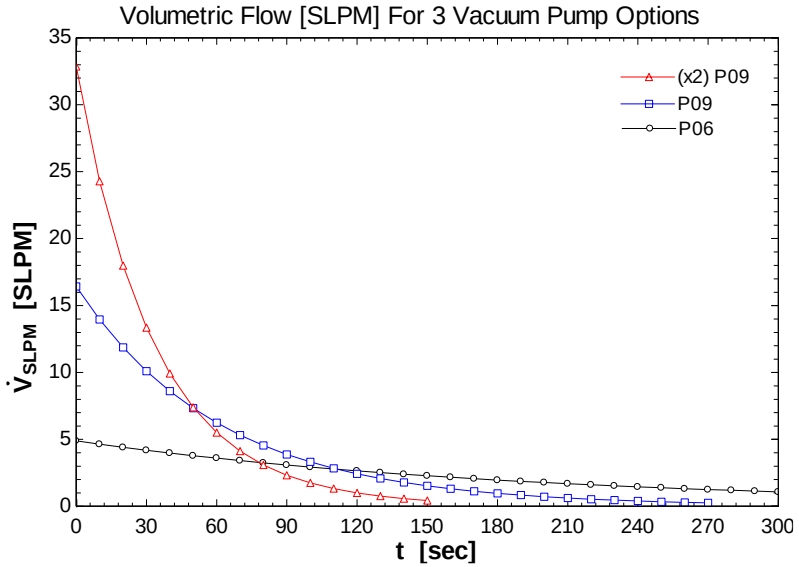

Approach

SUBSCALE UNITS OVERVIEW

- Oil-free nature of Air Squared's scroll compressor provides non-contamination and compact benefits for integration onto a lunar ISRU
  - Can be designed with select materials to be robust as a contaminant tolerant vacuum pump
  - Prevents concerns of oil contaminating downstream process
  - Low maintenance and compact design
  - Can operate in all orientations and in zero-gravity
- Six subscale scroll vacuum pumps were built and tested
  - The subscale units were a V06 and V09 with suction volume of 5cc/rev and 15cc/rev respectively
  - Number of the unit reflects its relative suction volume and letters next to each unit track the unique configuration between the identical model number
  - Testing 6 units with unique configurations to determine which configuration performs the best in this application
- 6-month Phase I project required us to experimentally evaluate subscale units already on hand

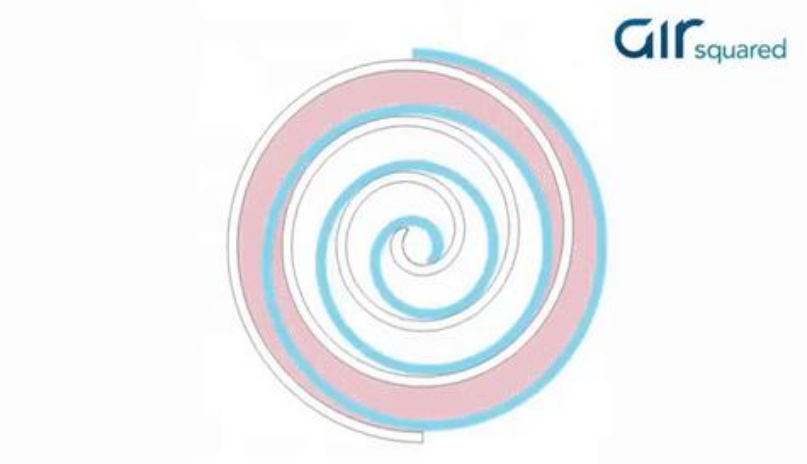

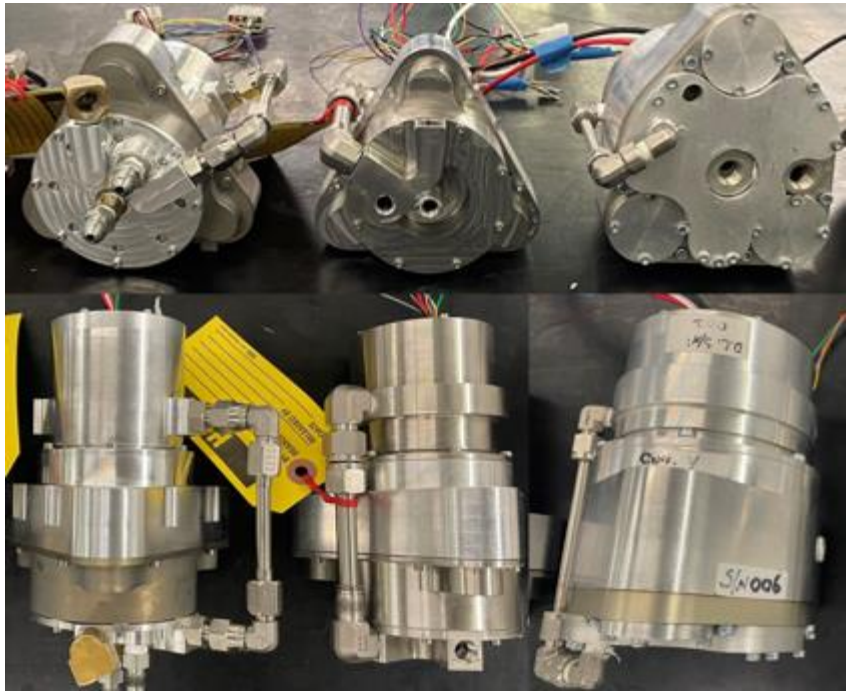

Approach

SUBSCALE UNITS OVERVIEW

- Scroll material, bearing type, and the use of bellows were investigated through the 6 different configurations
  - Performance with different scroll materials is important to understand since Alpha design will utilize contaminant tolerant material
  - Bellows isolate the working fluid to only contact the scrolls and protect all other internal components of the compressor from hazardous working fluid
  - Investigated different bearing grease on V09 due to grease leakage encountered during testing
- Summary of 6 different unit configurations:
  - **V06-F:** Aluminum scroll material, without bellows
  - **V06-G:** Aluminum scroll material, with bellows
  - **V06-R:** 316 stainless-steel scroll material, with bellows
  - **V09-X:** Aluminum scroll material, without bellows and different scroll spacing
  - **V09-T**: Same as V09-X but different bearing grease
  - **V09-S:** Aluminum scroll material, without bellows

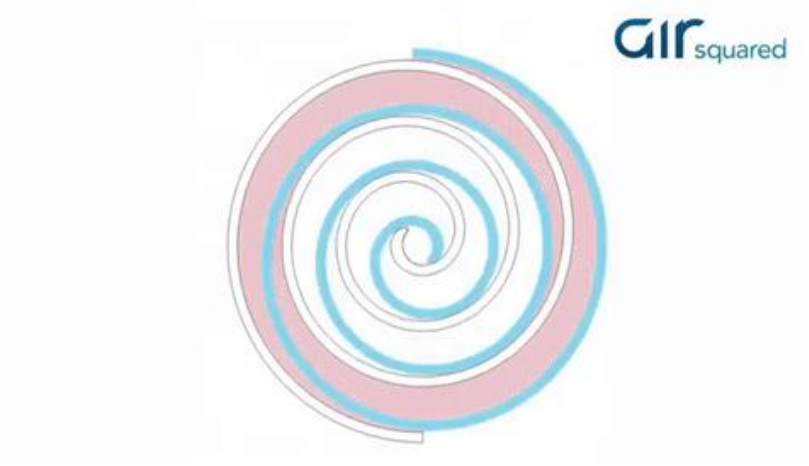

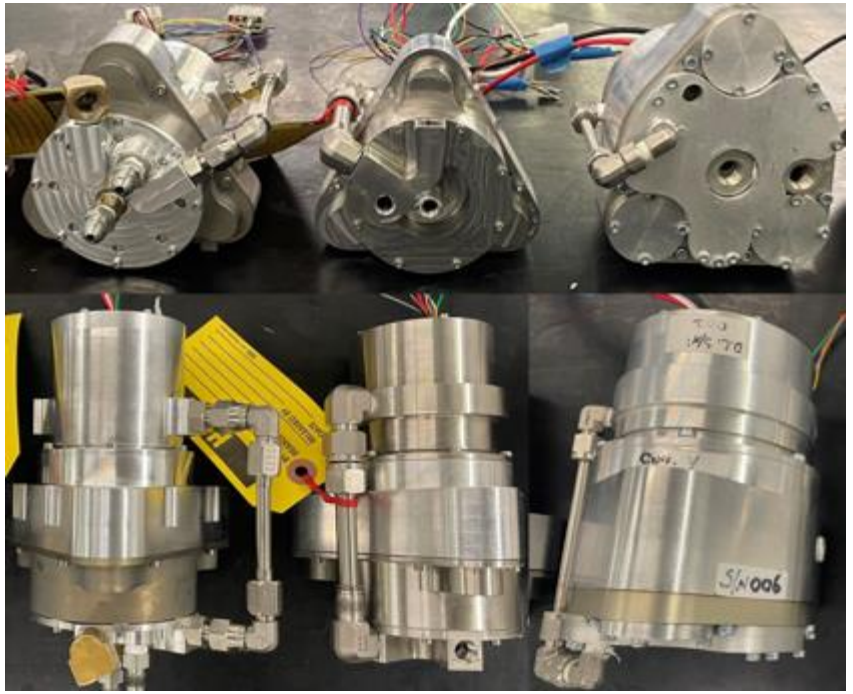

Results

TANK PRESSURE FOR SINGLE V06

- V06-F and V06-G vacuum pump can pull down 50L volume from 5 psia to 5 torr in about 14 minutes running at 4000 RPM
  - Actual pump down time of V06 agrees with EES analysis
- Comparable pump down time at 4000 RPM between two-unit configurations but found concerns with scrolls contacting in bellows
- Larger suction volume is required to reduce pump down time to 2 min
  - V06 is smallest suction volume being tested
  - V06-F doesn't have bellows with aluminum scrolls
  - V06-G has bellows with aluminum scrolls

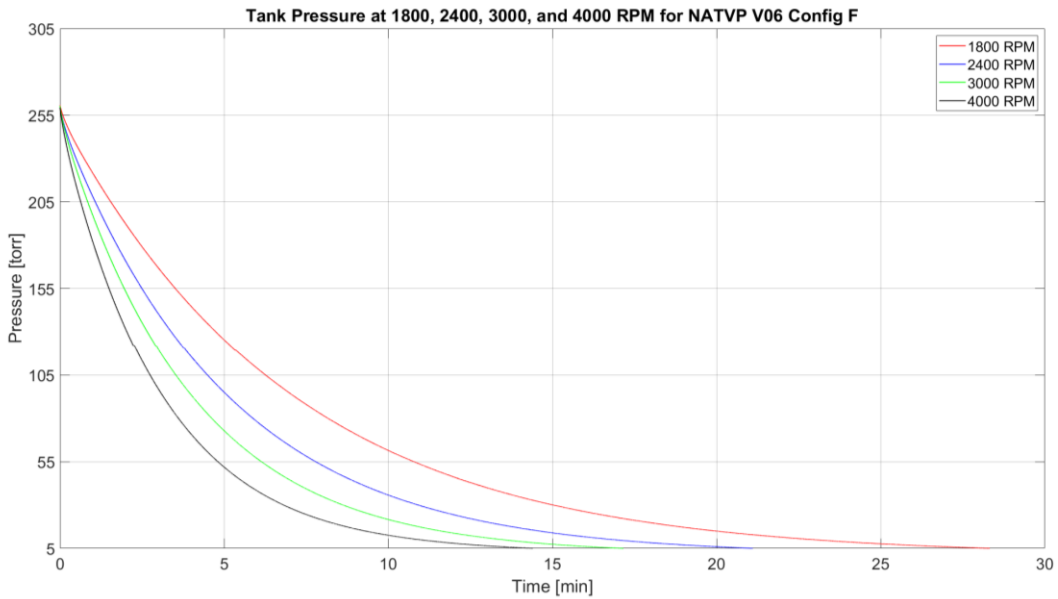

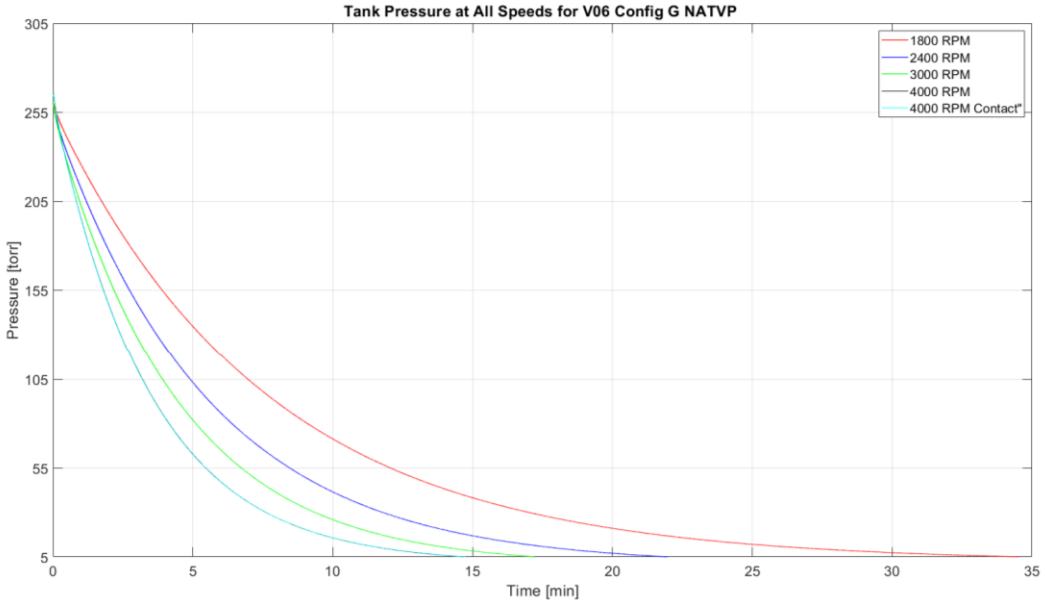

Results

ELECTRICAL WORK FOR SINGLE V06

- Electrical work helps determine ISRU required support to ensure vacuum pump can hit <2-minute pump down target
- Total energy consumed is about 58 kJ for 1800, 2400, and 3000 RPM but is increased by about 15kJ at 4000 RPM due to more energy consumed at the higher speed
- Total energy at 4000 RPM is reduced when testing with warmer coolant temperature due to higher mass flow rates from improved orbiting and fixed scroll sealing

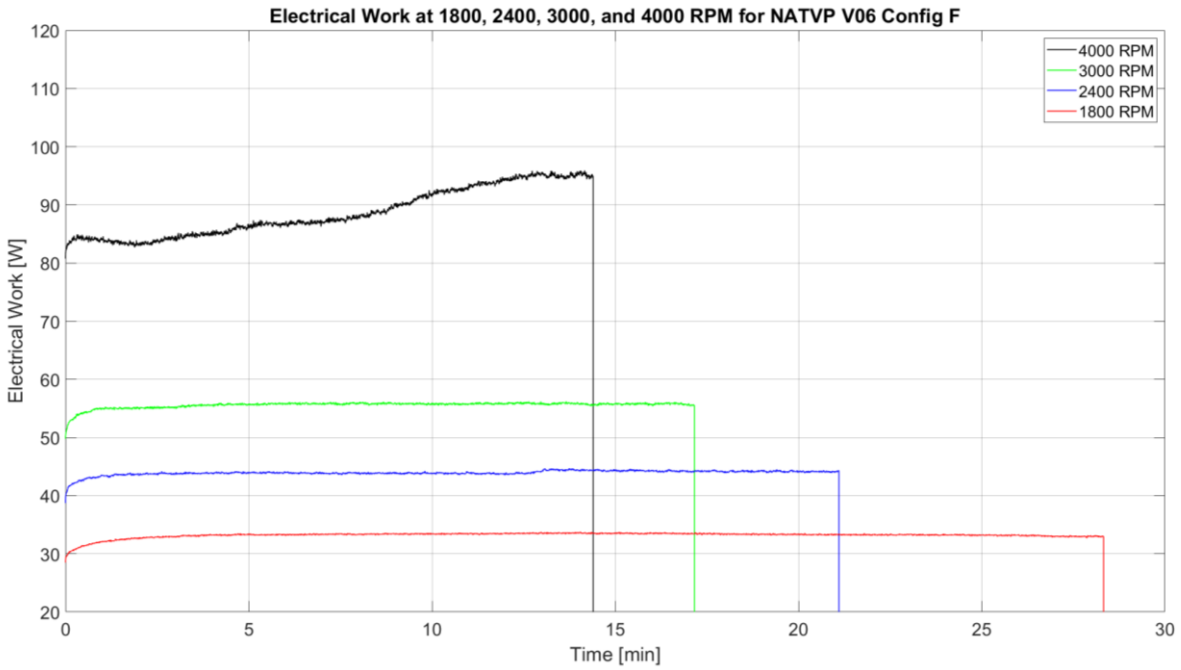

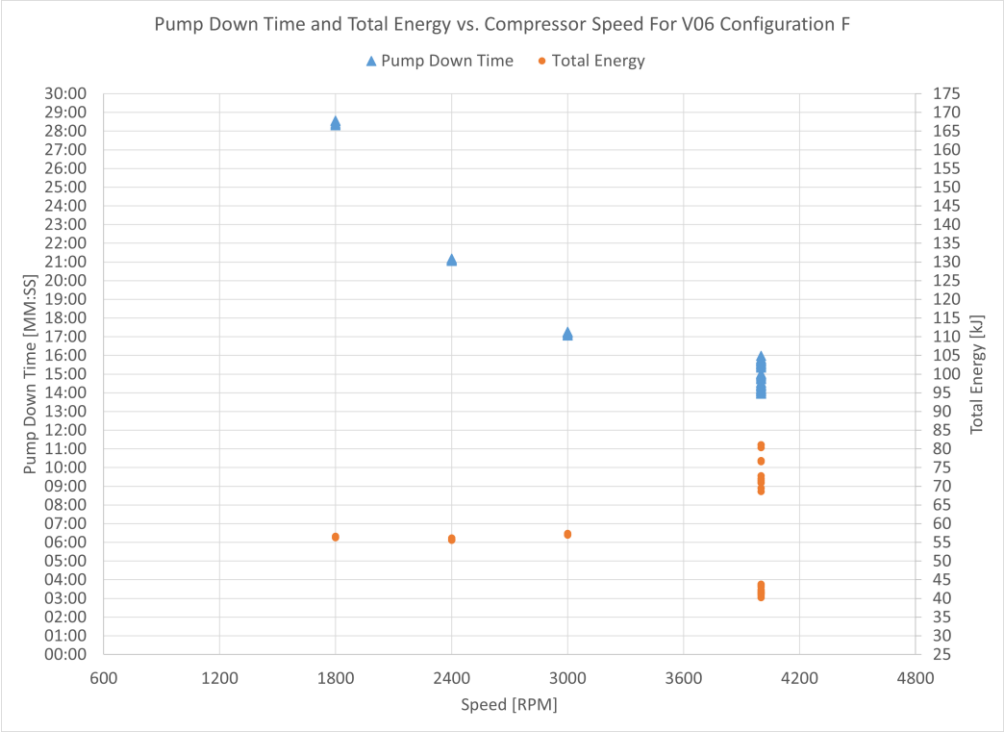

Results

TANK PRESSURE FOR SINGLE V09

- V09 vacuum pump at 4000 RPM pulls 50L tank down to 5 torr in about 6 minutes
  - 8 minutes faster than V06 at 4000 RPM
- Expected to pump down tank in 1/3 of time of a V06 since V09 suction volume is 3 times greater than V06
  - Doesn't align with EES analysis, possible bottle neck in suction line on test stand or unit configuration is not optimal
  - Increasing suction hose ID would reduce pressure drop to vacuum pump suction port theoretically increasing mass flow rate and reducing pump down time
- Expected that running single V09 with larger ID suction hose should result in pump down time closer to EES prediction
  - Still not at target pump down time below 2 min

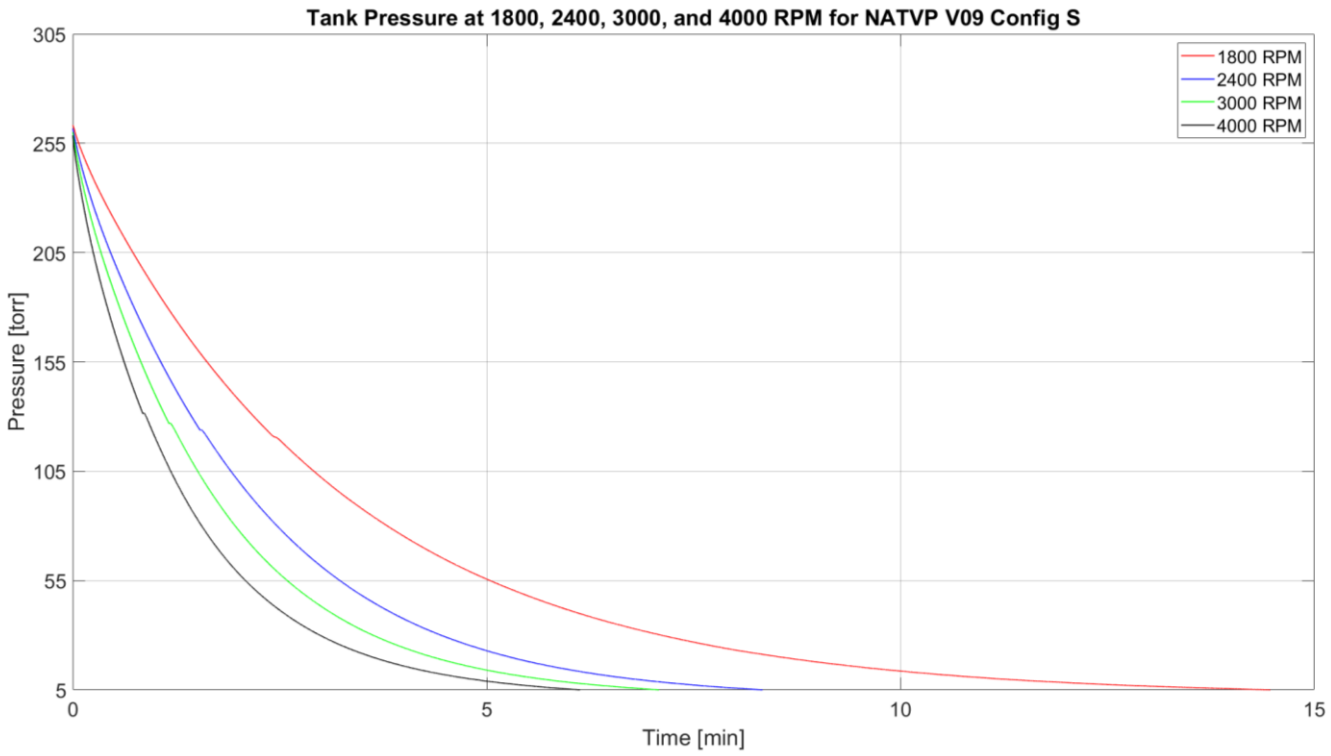

Results

TANK PRESSURE FOR SINGLE V09 WITH 1" SUCTION LINE

- V09 vacuum pump at 4000 RPM with 1" suction line pulls 50L tank down to 5 torr in about 3 minutes
  - 8 minutes faster than V06 at 4000 RPM
- Expected to pump down tank in 1/3 of the time of a V06 since V09 suction volume is 3 times greater than V06
  - Results from testing exceed EES analysis pump down time prediction by 1.5 min
  - Increasing suction hose ID from 0.5" to 1" had significant benefits by maintaining high suction density at vacuum pump suction to reduce pump down time
  - There is an unknow benefit from increasing the suction volume of the vacuum pump that allows us to exceed the EES analysis
- Expected that running two V09s in parallel should reach pump down time below 3 min

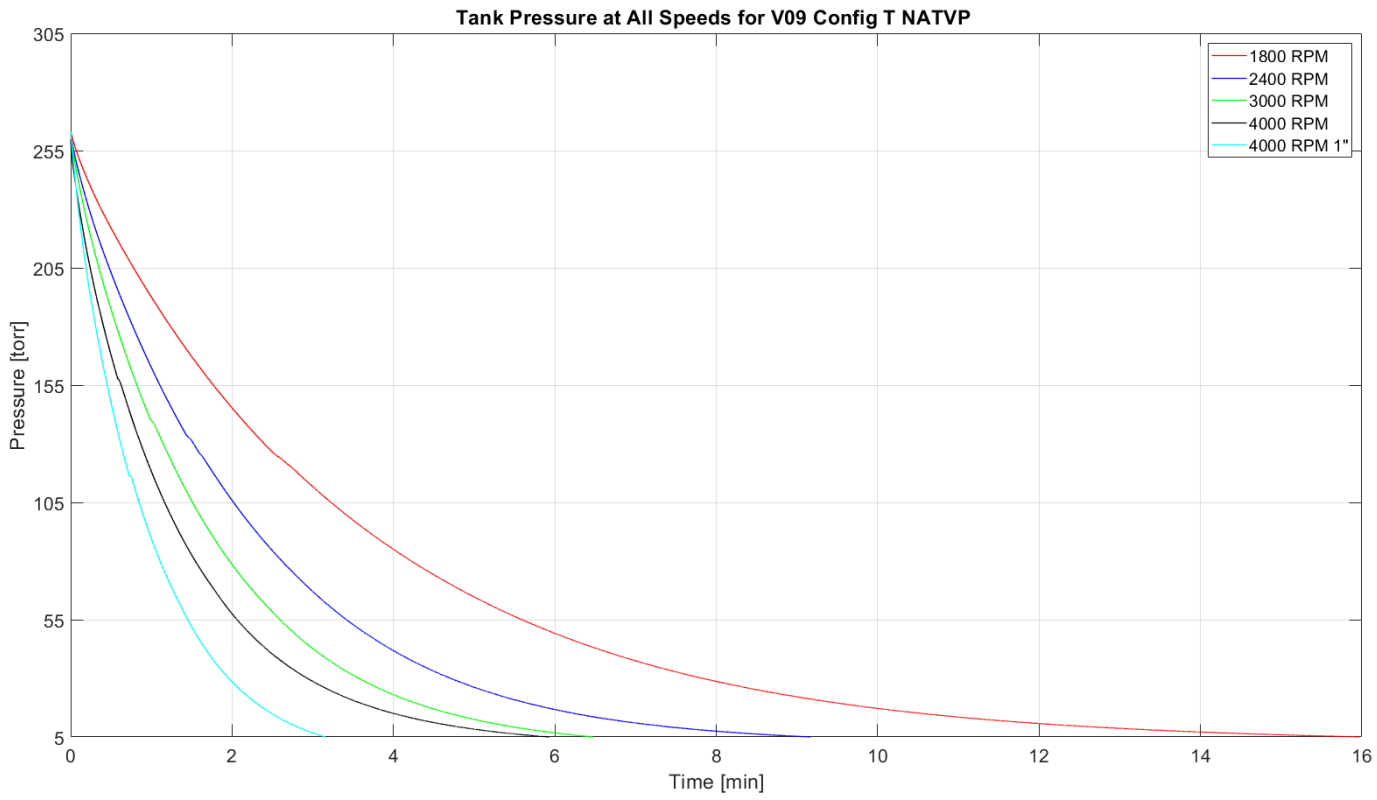

Results

ELECTRICAL WORK FOR SINGLE V09

- Transient work is initially high due to higher inlet density (higher pressure) for unit V09-S
- Energy consumed at1800 RPM decreased from 50kJ to 40kJ at higher speeds
  - Greatly reduced total energy consumed at 4000 RPM with 1" suction line due to less operation time
- Understanding that pressure drop is crucial at vacuum conditions and larger ID hoses are extremely beneficial to reduce pump down time and energy consumed

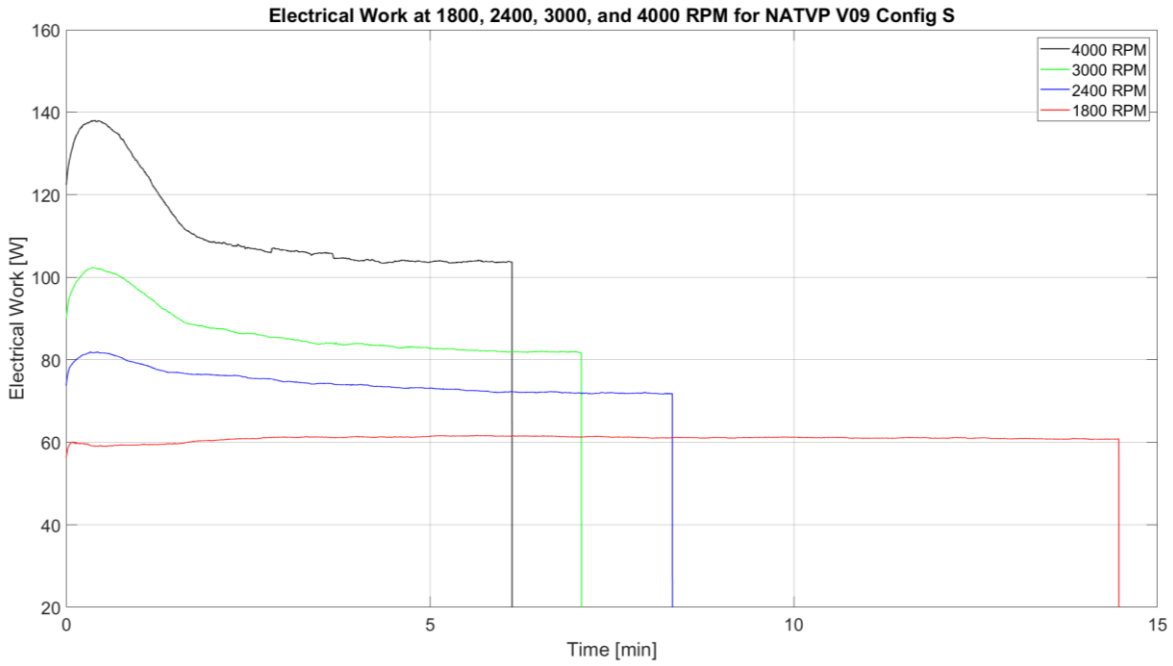

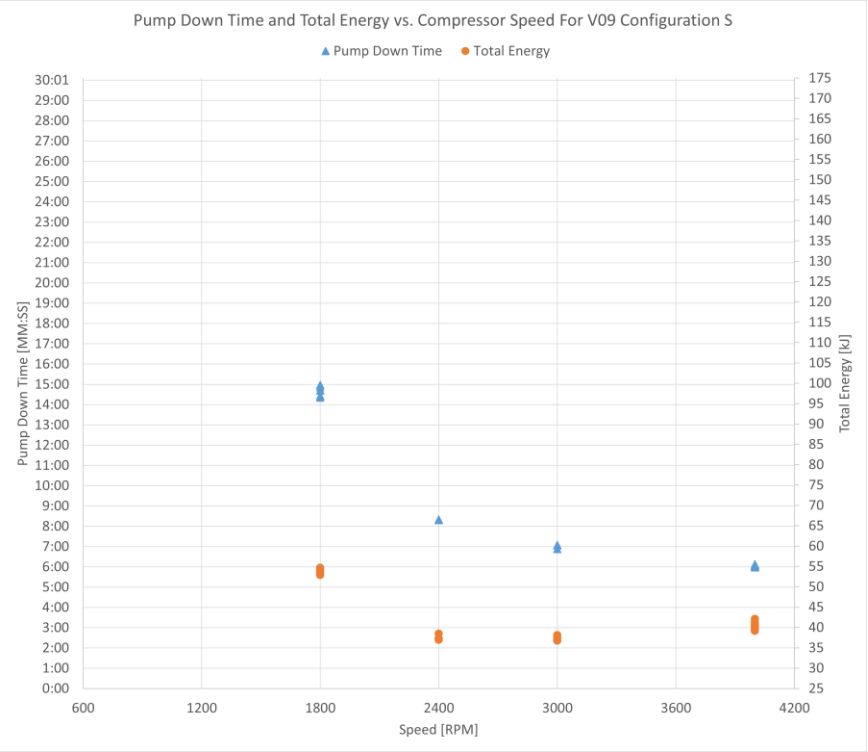

Results

TANK PRESSURE FOR DUAL V09S

- Fastest pump down time is about 2.75 min with dual V09s running at 4000 RPM with 1/8″ suction line
  - Not much reduction in pump down time with 2 V09s compared to a single V09 with 1″ suction line
  - Didn't use 1″ suction line ID for each unit since only had a single 1″ suction line on hand
- Increasing suction line ID from 1/8″ to 1/4″ and running compressors at speeds above 4000 RPM allowed us to reach target pump down time of 2 min
- Can see benefits for further increasing suction line ID to further reduce pump down time in future testing
  - Can experimentally document the benefits of increasing the suction line ID and will not have to rely on EES analysis to make these predictions

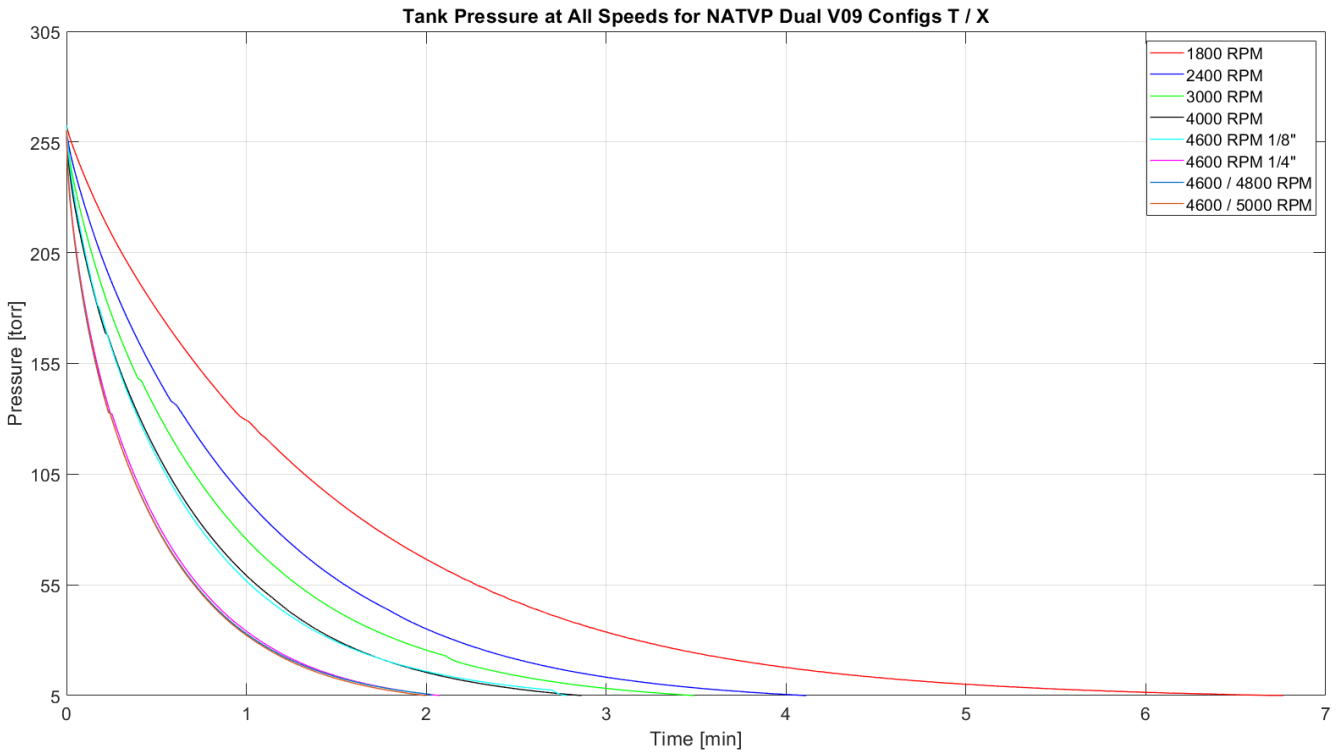

Results

ELECTRICAL WORK FOR DUAL V09S

- Clear trend in reduced pump down time with increasing speed
- Total energy decreases initially from 1800 RPM to 2400 RPM but then continues to increase at speeds higher than 2400 RPM
  - Similar to total energy trend seen for single V09
- Increasing suction line ID (circled region) reduced pump down time to below 2 minutes and noticeably decreased total energy consumed by vacuum pumps

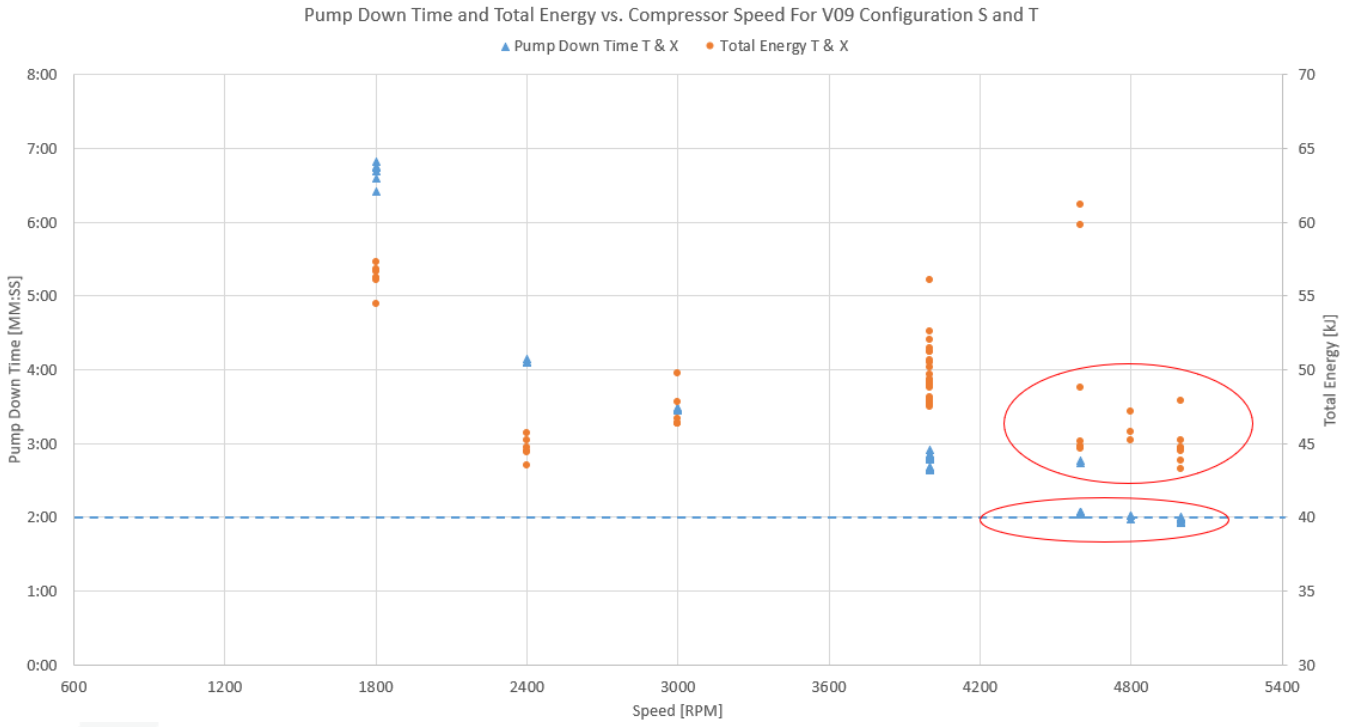

Next Steps

ALPHA DESIGN STUDY

- Scroll materials are Inconel 600
  - Preferred over other recommended materials being slightly easier to machine
  - Revisit Monel 400 and Hastelloy B-2 materials during design study with FEA
  - Select alterative material on spare scroll pack such as Hastelloy C-276
  - Update material evaluation to address ISRU updates and feedback
- Full sizing to evacuate a 50-liter vessel under 2-minutes at minimal speed of 1,800 RPM
  - Reduce tip seal velocities
  - Improve bellows life with reduced frequency of eccentric motion
- PTFE tip seals are confirmed as suitable, but acid vapor and regolith exposure testing may require glass filled or carbon filled PTFE tip seals

For dual units (x2) operating in parallel, a single unit suction volume for the four efficiency curves are:

- 47.5 cm^3/rev to hit 5.004 Torr tank pressure in 2 minutes at 1,800 RPM (Org. Vol%)
- 45 cm^3/rev to hit 4.65 Torr tank pressure in 2 minutes at 1,800 RPM (+5% Vol%)
- 41 cm^3/rev to hit 4.963 Torr tank pressure in 2 minutes at 1,800 RPM (+10% Vol%)
- 37.5 cm^3/rev to hit 5.319 Torr tank pressure in 2 minutes at 1,800 RPM (+15% Vol%)

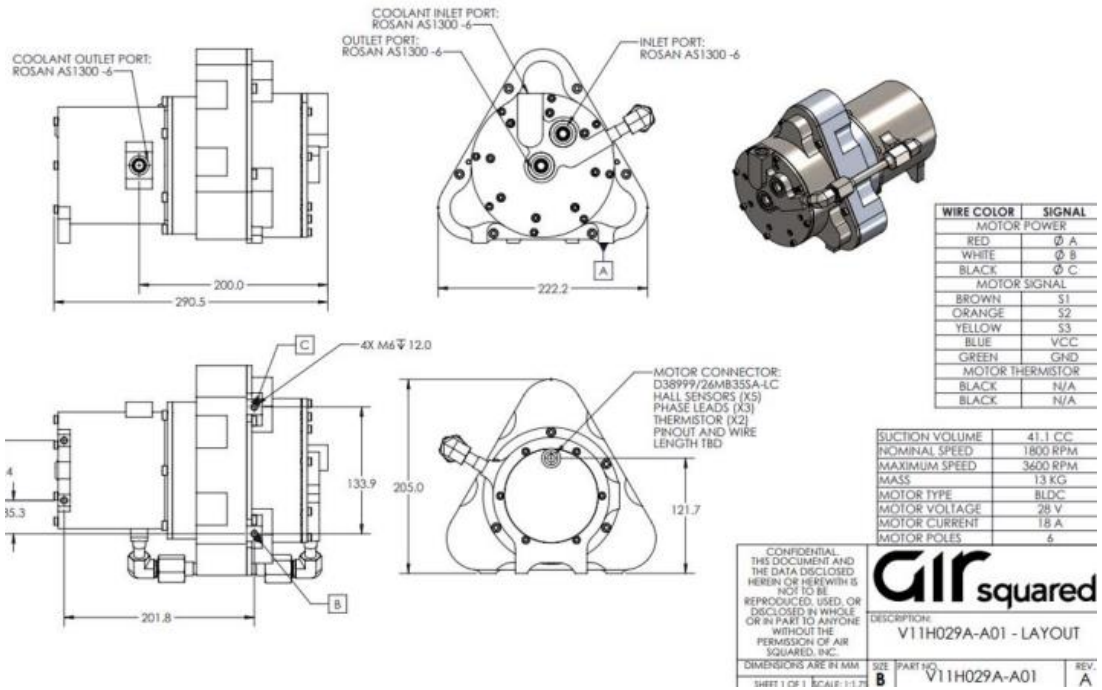

Next Steps

PHASE II TEST STAND OVERVIEW

- Utilize off the shelf vacuum vessel
  - Actively pulling as deep of a vacuum as possible on the vessel
  - Able to replicate lunar south pole temperature swings (-80C to 50C) while idle
- Reduce risk and complexity using nitrogen as baseline working fluid
  - NASA feedback express concerns not using oxygen rich working fluid
  - ISRU method is not finalized and unable to determine suitable oxygen concentration - current reference is carbothermal reduction
- Sources on carbothermal reduction and associated topic requirements do not align to seeing a high percentage of oxygen gas for ISRU air locking support
  - H_2, H_2S, CO, and CO_2

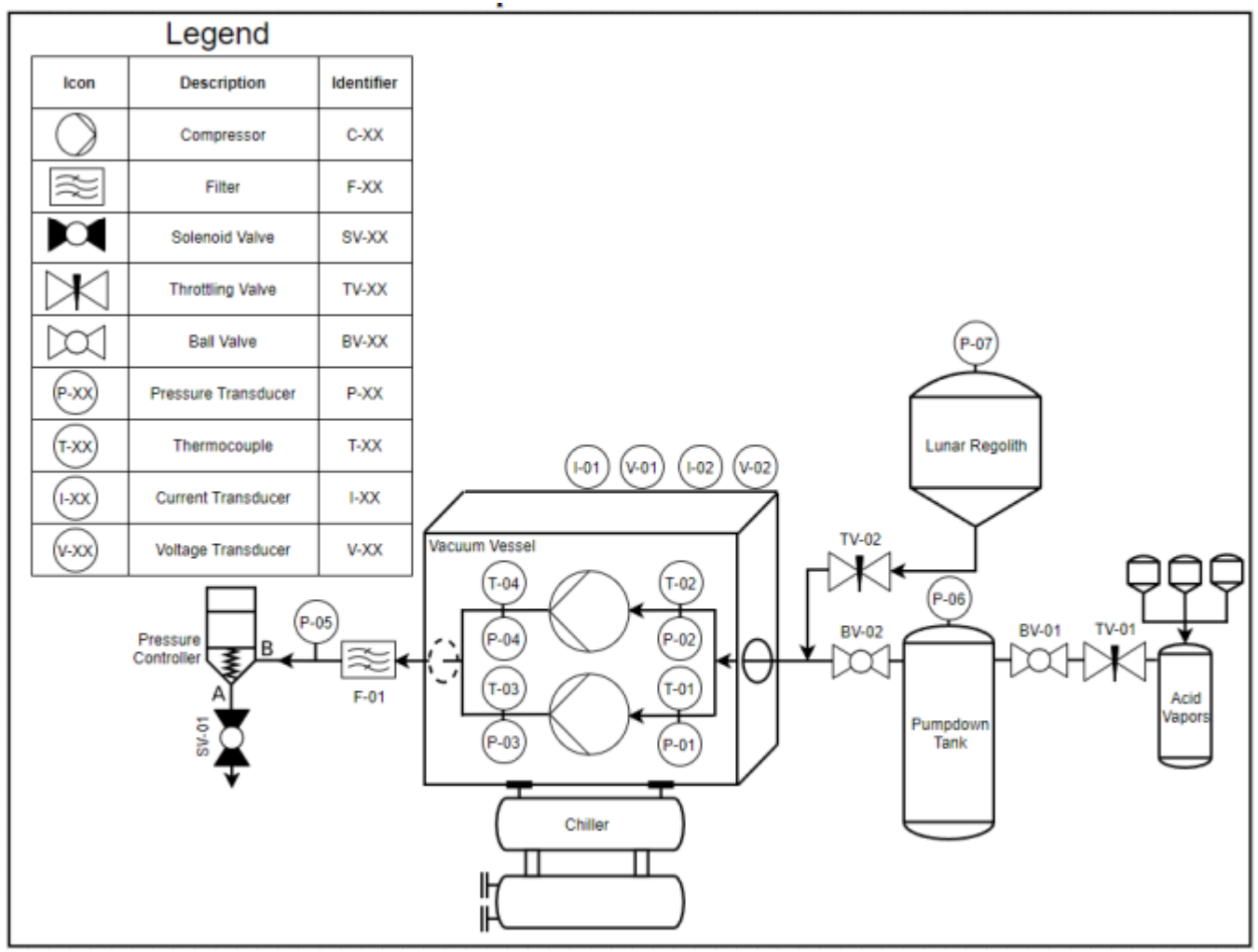

Figure 28: Vacuum depressurization acid vapor and lunar regolith simulant wear test stand preliminary plumbing & instrumentation diagram

Next Steps

NOVEL OXYGEN EXTRACTION CONCEPTS

- Located 2010 source [2]
  - Basic and advanced flow chart
  - Attempt to identify location of vacuum pump
  - Carbothermal reduction reactor has simulant input and slag output
- Pump may be exposed to corrosive substances such as HCl, HF, and H_2S
  - 1 kg melted and process regolith liberates 0.36 g HCL, 0.68 g of HF, and 0.10 g of H_2S
  - Acids to be removed from mixed gas stream CO, CO_2 and H_2
  - Lunar regolith contains ~ 45 wt.% oxygen chemical bound

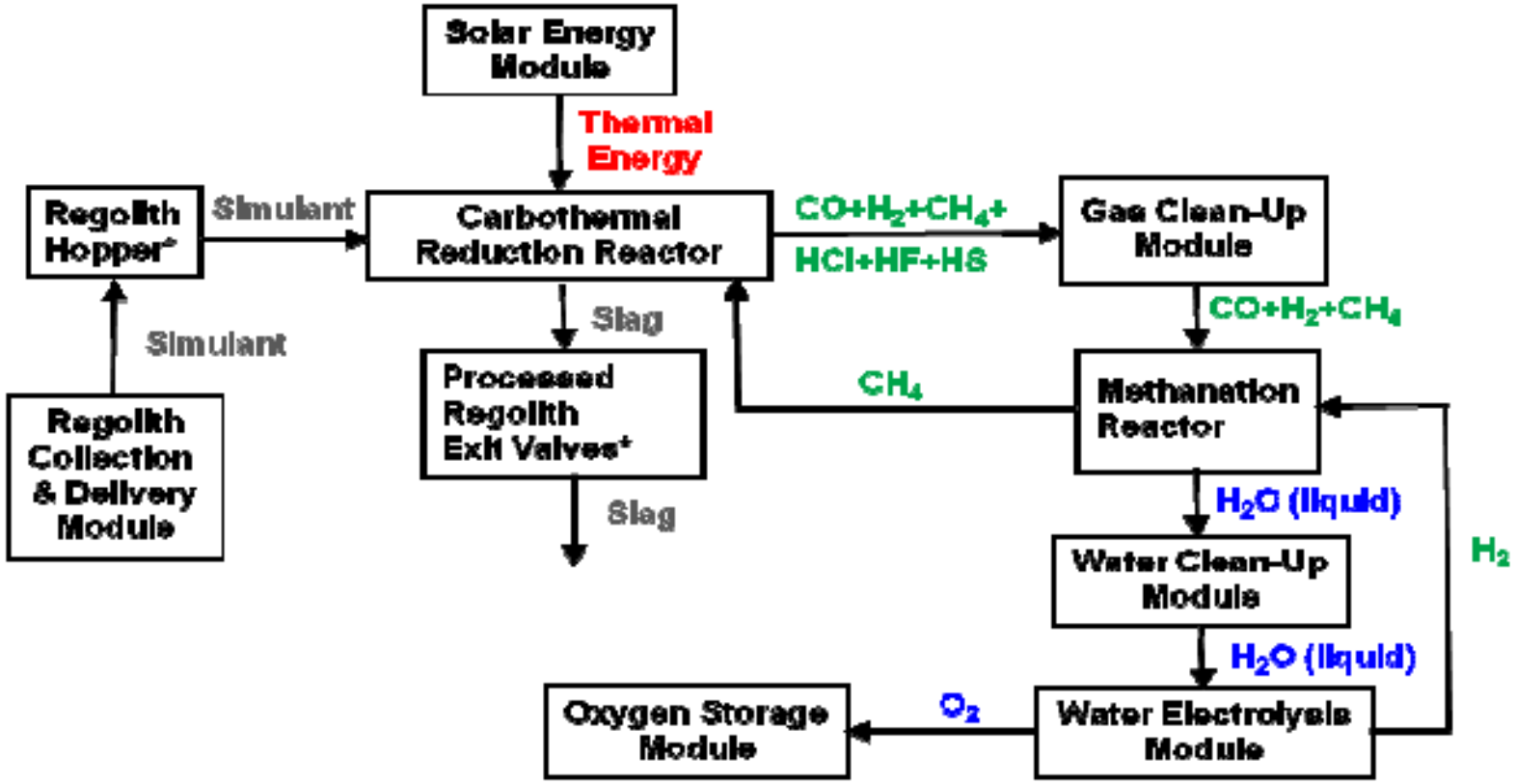

Figure 3. Configuration of the Carbothermal Regolith Processing System.

[2] Robert J. Gustafson. "Demonstrating the Solar Carbothermal Reduction of Lunar Regolith to Produce Oxygen." *48th AIAA Aerospace Sciences Meeting Including the New Horizons Forum and Aerospace Exposition, Orlando, Florida, 4 – 7 January 2010* - https://arc.aiaa.org/doi/abs/10.2514/6.2010-1163

Next Steps

NOVEL OXYGEN EXTRACTION CONCEPTS

- Located 2019 source [3]
  - Basic and advanced flow chart
  - Attempt to identify location of vacuum pump
  - Supply Hopper / Spent Hopper location of regolith valves
  - See two compressors and one vacuum pump listed
  - 50-liter volume with 2-minute target
- Pump may be exposed to corrosive substances such as HCl, HF, and H_2S
  - 1 kg melted and process regolith liberates 0.36 g HCL, 0.68 g of HF, and 0.10 g of H_2S
  - Acids to be removed from mixed gas stream CO, CO_2 and H_2
  - Lunar regolith contains ~ 45 wt.% oxygen chemical bound

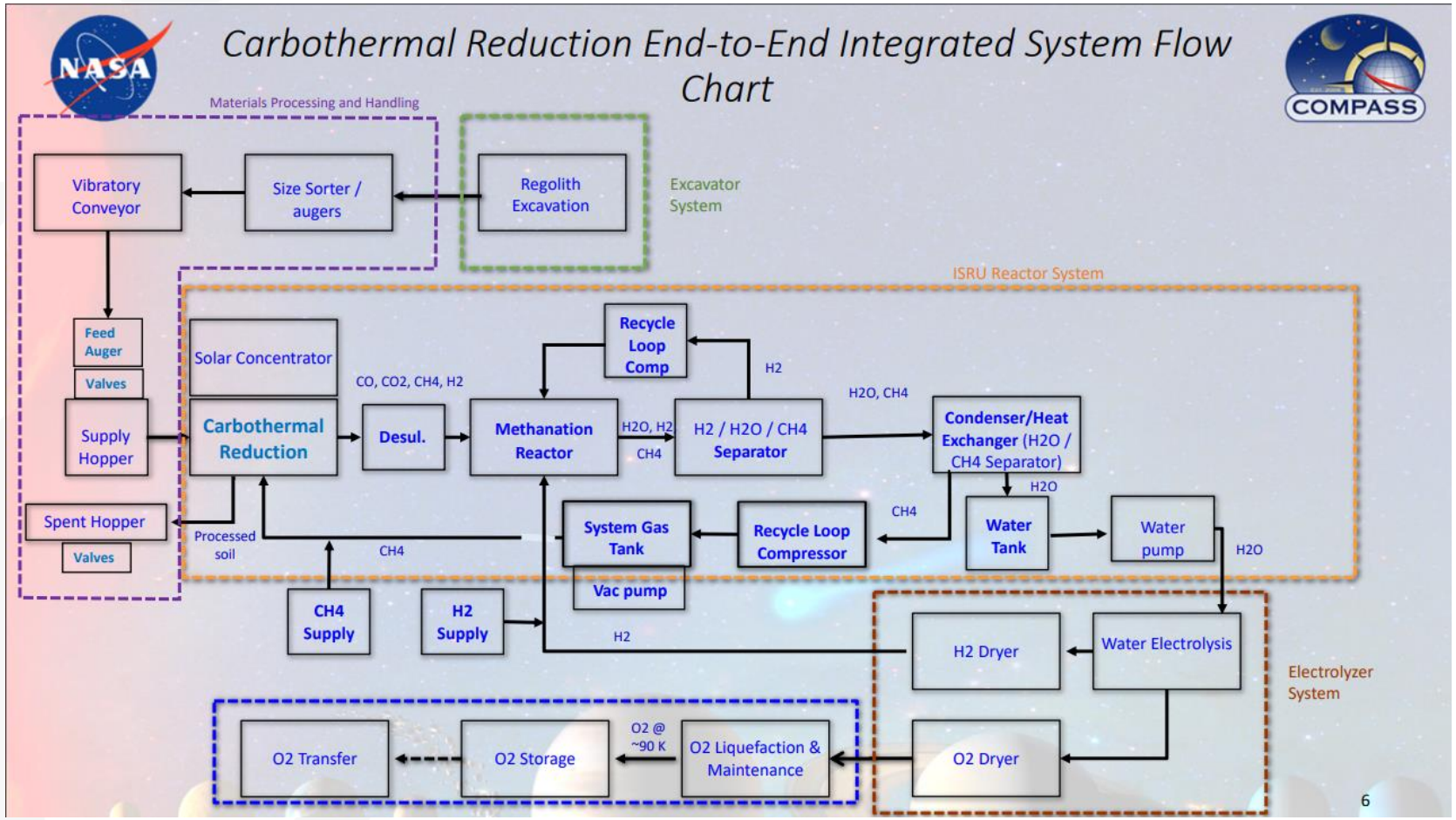

[3] https://ntrs.nasa.gov/api/citations/20190029197/downloads/20190029197.pdf

Next Steps

LOCATION OF TEST SYSTEM IN FLOW CHART

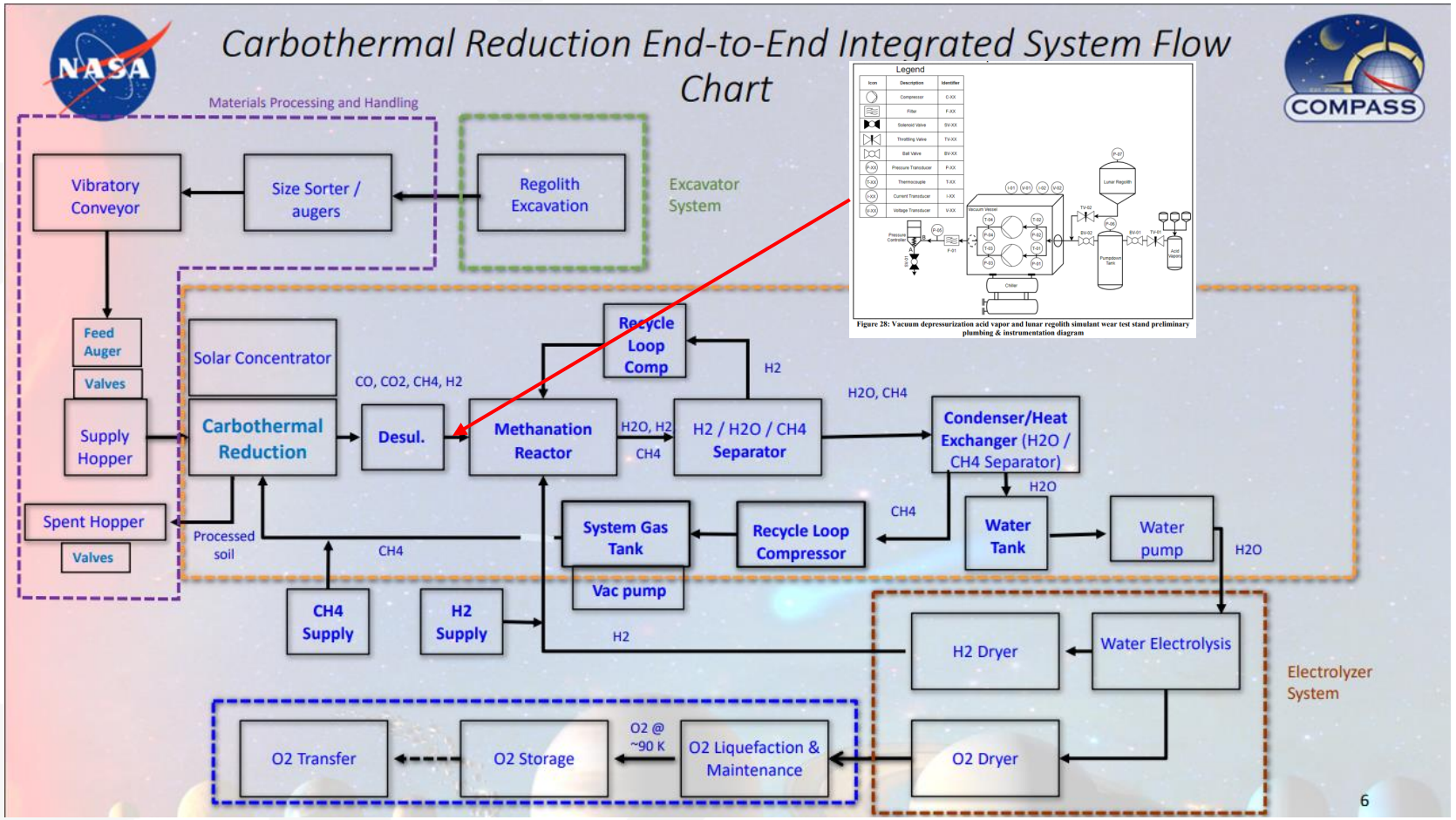

Conclusions

CLOSING THOUGHTS AND OPEN QUESTIONS

- Evaluated 6 different vacuum pump configurations
  - Confirmed that Air Squared's oil-free scroll vacuum pump can pump down 50L volume starting from 5 Psia to 5 torr in 2 minutes or less when running 2 V09s in parallel
  - Test results provided valuable insight on second phase test stand design and Alpha vacuum pump design
- Looking to gain clarity on vacuum pump location for Phase II testing
  - Concentration of acid vapors – for any lunar ISRU approach?
  - Expected temperature of acid vapors from any reactor type – 20C/100C?
  - Confirm lack of oxygen concentration for ISRU air lock support?
  - Expected tank volume if different that 50L?
  - Regolith / acid vapor handling for repeatable testing?
  - Expected thermal isolation or liquid cooling/heating support?
  - Contamination verification?
- Looking for ISRU developers for support during Phase II testing or involvement with post Phase II starting Q1 2024 with additional funds

Thank you!

Air Squared, Inc. would like to thank **NASA** for supporting our Phase I/Phase II **Small Business Innovative Research** project and we additionally we would like to acknowledge the hard work provided by **Vachik Garkanian** at Jet Propulsion Lab, **NASA Shared Services Center**, and **Keith Jensen** at Nova-Tech Engineering, LLC.

© 2019 Air Squared, Inc.

Questions for ISRU Attendees

- Concentration of acid vapors – for any lunar ISRU approach?
- Expected temperature of acid vapors from any reactor type – 20C/100C?
- Confirm lack of oxygen concentration for ISRU air lock support?
- Expected tank volume if different that 50L?
- Regolith / acid vapor handling for repeatable testing?
- Expected thermal isolation or liquid cooling/heating support?
- Contamination verification?

© 2019 Air Squared, Inc.

Backup Slides

Phase I Test Stand

PHASE I TEST STAND P&ID

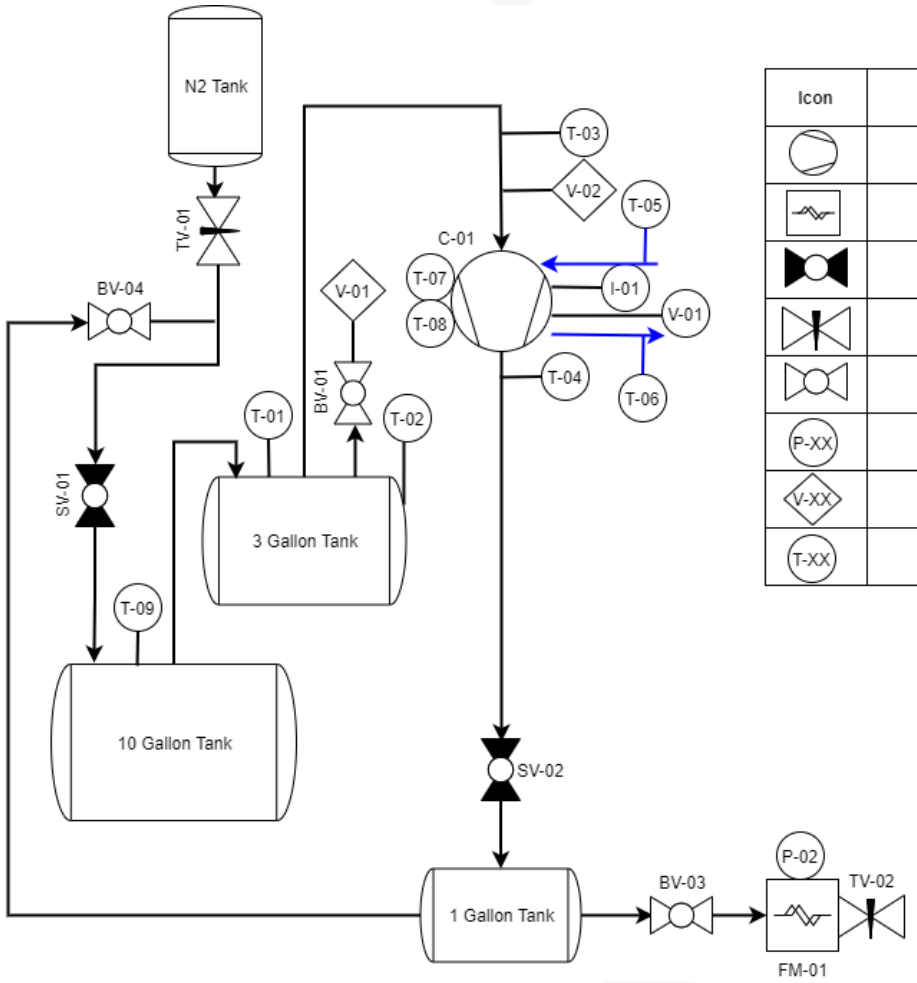

Legend

Icon	Description	Identifier
	Compressor	C-XX
	Flow Controller with Pressure Feedback	FM-XX
	Solenoid Valve	SV-XX
	Throttling Valve	TV-XX
	Ball Valve	BV-XX
P-XX	Pressure Transducer	P-XX
V-XX	Vacuum Transducer	V-XX
T-XX	Thermocouple	T-XX